FXE060-10-CM

FlexPro® Series
Product Status: Active

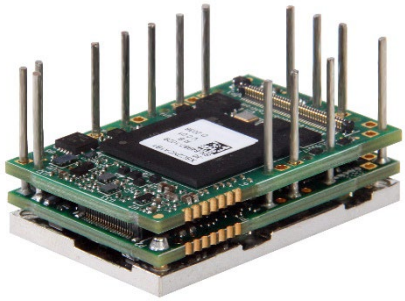

SPECIFICATIONS

Current Peak	**20 A**
Current Continuous	**10 A**
DC Supply Voltage	**10 – 55 VDC**
Network Communication	**CANopen**

The **FXE060-10-CM** is a FlexPro® series Extended Environment servo drive with IMPACT™ architecture.

The **FXE060-10-CM** offers full tuning control of all servo loops and is designed to drive brushed and brushless servo motors, stepper motors, and AC induction motors. The drive accepts a variety of external command signals, or can use the built-in Motion Engine, an internal motion controller used with Sequencing and Indexing commands. Programmable digital and analog I/O are included to enhance interfacing with external controllers and devices.

The **FXE060-10-CM** features a CANopen interface for network communication and USB connectivity for drive configuration and setup. All drive and motor parameters are stored in non-volatile memory.

IMPACT™ (**I**ntegrated **M**otion **P**latform **A**nd **C**ontrol **T**echnology) combines exceptional processing capability and high-current components to create powerful, compact, feature-loaded servo solutions. IMPACT™ is used in all FlexPro® drives and is available in custom products as well.

The **FXE060-10-CM** conforms to the following specifications and is designed to the Environmental Engineering Considerations as defined in MIL-STD-810F.

EXTENDED ENVIRONMENT PERFORMANCE

Ambient Operating Temperature Range	**-40°C to +95°C (-40°F to +203°F)**
Thermal Shock	**-40°C to +95°C (-40°F to +203°F) within 3 min.**
Relative Humidity	**0 to 95%, Non-Condensing**
Vibration	**25 Grms for 5 min. in 3 axes**
Altitude	**-400m to +25000m**
Contaminants	**Pollution Degree 2**

FEATURES

- Follows the CAN in Automation (CiA) 301 Communications Profile and 402 Device Profile
- Four Quadrant Regenerative Operation
- Programmable Gain Settings
- PIDF Velocity Loop
- Space Vector Modulation (SVM) Technology
- Fully Configurable Current, Voltage, Velocity and Position Limits
- Compact Size, High Power Density
- On-the-Fly Mode Switching
- On-the-Fly Gain Set Switching
- Dedicated Safe Torque Off (STO) Inputs

Feedback Supported	• Absolute Encoder
	  ○ BiSS C-Mode
	  ○ EnDat 2.2
	  ○ Tamagawa/Nikon
	  ○ SSI
	• Incremental Encoder
	• Hall Sensors
	• Aux Incremental Encoder
	• Tachometer (±10V)
		Motors Supported	• Three Phase
			• Single Phase
			• Stepper
			• AC Induction
				Modes of Operation	• Profile Modes
					• Cyclic Synchronous Modes
					• Current
					• Velocity
					• Position
					• Interpolated Position Mode (PVT)

Command Sources	• Over the Network • ±10V Analog • Sequencing • Indexing • Jogging • Step & Direction • Encoder Following	**Inputs / Outputs**	• 4 Programmable Digital Inputs • 3 Programmable Digital Outputs • 1 Programmable Analog Input	**Agency Approvals**	• RoHS • MIL-STD-810F (as stated) • MIL-STD-1275D (optional) • MIL-STD-461E (optional) • MIL-STD-704F (optional) • MIL-HDBK-217 (optional)

ADVANCED Motion Controls · 3805 Calle Tecate, Camarillo, CA, 93012
ph# 805-389-1935 · fx# 805-389-1165 · www.a-m-c.com

BLOCK DIAGRAM

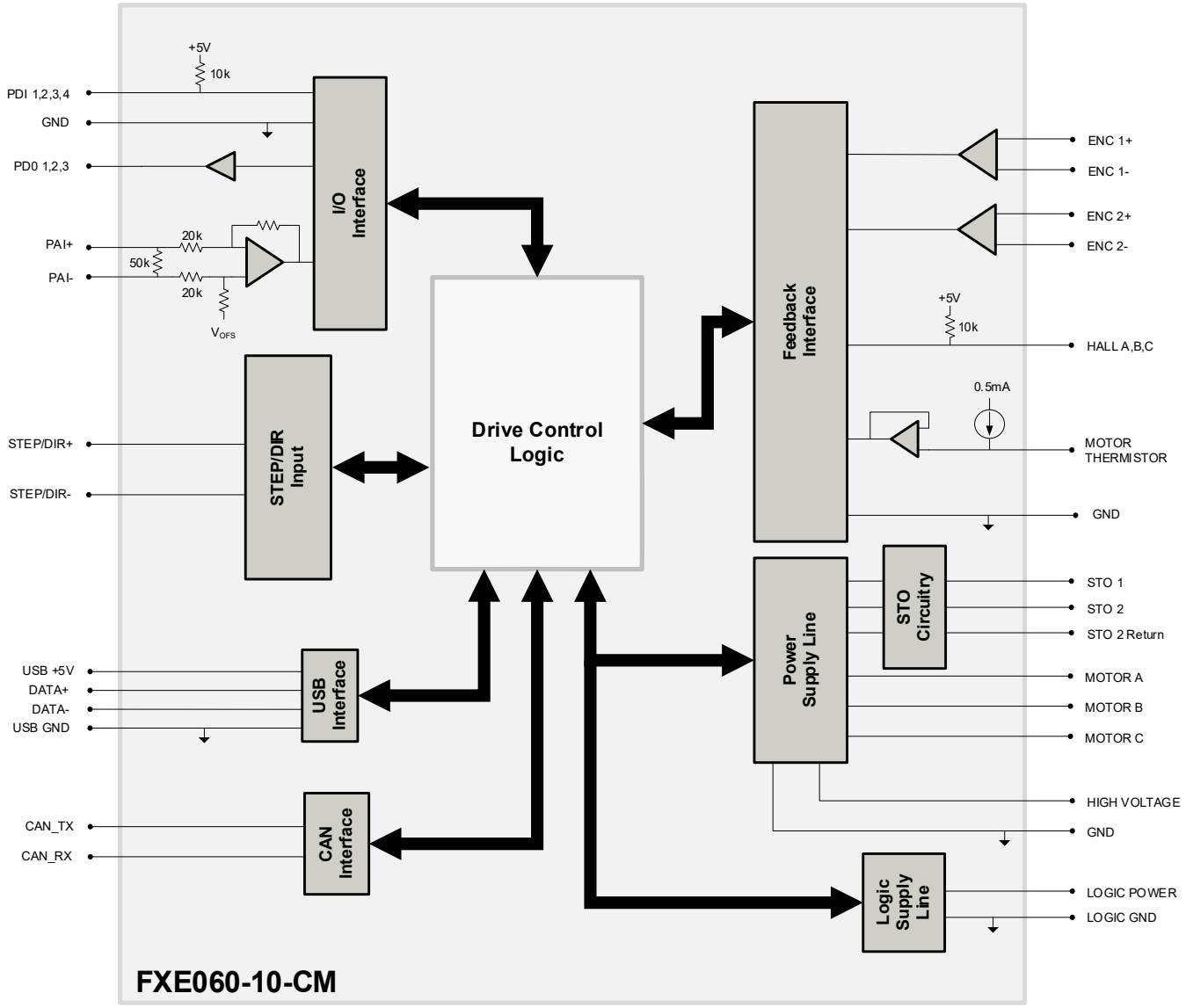

INFORMATION ON APPROVALS AND COMPLIANCES

RoHS Compliant	The RoHS Directive restricts the use of certain substances including lead, mercury, cadmium, hexavalent chromium and halogenated flame retardants PBB and PBDE in electronic equipment.
MIL-STD-810F	Environmental Engineering Considerations and Laboratory Tests – (as stated)
MIL-STD-1275D	Characteristics of 28 Volt DC Electrical Systems in Military Vehicles – (optional)
MIL-STD-461E	Requirements for the Control of Electromagnetic Interference Characteristics of Subsystems and Equipment – (optional)
MIL-STD-704F	Aircraft Electric Power Characteristics – (optional)
MIL-HDBK-217	Reliability Prediction of Electronic Equipment (MTBF) – (optional)

SPECIFICATIONS

Electrical Specifications		
Description	Units	Value
Nominal DC Supply Input Range	VDC	12 – 48
DC Supply Input Range	VDC	10 – 55
DC Supply Undervoltage	VDC	8
DC Supply Overvoltage	VDC	58
Logic Supply Input Range (optional)	VDC	10 – 55
Safe Torque Off Voltage (Default)	VDC	5
Minimum Required External Bus Capacitance	µF	500
Maximum Peak Current Output[1]	A (Arms)	20 (14.1)
Maximum Continuous Current Output[2]	A (Arms)	10 (10)
Efficiency at Rated Power	%	99
Maximum Continuous Output Power	W	545
Maximum Power Dissipation at Rated Power	W	6
Minimum Load Inductance (line-to-line)[3]	µH	150 (@ 48VDC supply); 75 (@24VDC supply); 40 (@12VDC supply)
Switching Frequency	kHz	20
Maximum Output PWM Duty Cycle	%	83

Control Specifications		
Description	Units	Value
Communication Interfaces	-	CANopen (USB for configuration)
Command Sources	-	±10 V Analog, Over the Network, Sequencing, Indexing, Jogging, Step & Direction, Encoder Following
Feedback Supported	-	Absolute Encoder (BiSS C-Mode, EnDat 2.2, Tamagawa/Nikon, SSI), Hall Sensors, Incremental Encoder, Auxiliary Incremental Encoder, Tachometer (±10V)
Commutation Methods	-	Sinusoidal, Trapezoidal
Modes of Operation	-	Profile Modes, Cyclic Synchronous Modes, Current, Velocity, Position, Interpolated Position Mode (PVT)
Motors Supported[4]	-	Three Phase (Brushless Servo), Single Phase (Brushed Servo, Voice Coil, Inductive Load), Stepper (2- or 3-Phase Closed Loop), AC Induction (Closed Loop Vector)
Hardware Protection	-	40+ Configurable Functions, Over Current, Over Temperature (Drive & Motor), Over Voltage, Short Circuit (Phase-Phase & Phase-Ground), Under Voltage
Programmable Digital Inputs/Outputs	-	4/3
Programmable Analog Inputs/Outputs	-	1/0
Primary I/O Logic Level	-	5 VDC, not isolated
Current Loop Sample Time	µs	50
Velocity Loop Sample Time	µs	100
Position Loop Sample Time	µs	100
Maximum Encoder Frequency	MHz	20 (5 pre-quadrature)

Mechanical Specifications		
Description	Units	Value
Size (H x W x D)	mm (in)	38.1 x 25.4 x 11.5 (1.50 x 1.00 x 0.45)
Weight	g (oz)	19.8 (0.7)
Ambient Operating Temperature Range[5]	°C (°F)	-40 – 95 (-40 – 203)
Storage Temperature Range	°C (°F)	-50 – 100 (-58 – 212)
Thermal Shock	°C (°F)	-40 – 95 (-40 – 203) within 3 min
Relative Humidity	-	0-95%, non-condensing
Vibration	Grms	25 for 5 minutes in 3 axes
Altitude	m	-400 – 25000
Contaminants	-	Pollution Degree 2
Form Factor	-	PCB Mounted
P1 SIGNAL CONNECTOR	-	80-pin 0.4mm spaced connector
TERMINAL PINS	-	15x Terminal Pins

Notes

1. Capable of supplying drive rated peak current for 2 seconds with 5 second foldback to continuous value. Longer times are possible with lower current limits.
2. Continuous A_{rms} value attainable when RMS Charge-Based Limiting is used.
3. Lower inductance is acceptable for bus voltages well below maximum. Use external inductance to meet requirements.
4. Maximum motor speed for stepper motors is 600 RPM. Consult the hardware installation manual for 2-phase stepper wiring configuration.
5. Additional cooling and/or heatsink may be required to achieve rated performance.

PIN FUNCTIONS

P1 – Signal Connector

Pin	Name	Description / Notes	I/O	Pin	Name	Description / Notes	I/O
1	GROUND	Ground	GND	2	GROUND	Ground	GND
3	PAI-1+	Differential Programmable Analog Input or Reference Signal Input (12-bit Resolution)	I	4	DATA+ USB	USB Data Channel	I/O
5	PAI-1-		I	6	DATA- USB		I/O
7	THERMISTOR	Motor Thermal Protection.	I	8	GROUND	Ground	GND
9	GROUND	Ground	GND	10	SCLA	I²C Data Signals for Addressing, Network Error LED, and Bridge Status LED. See Hardware Manual for more info.	O
11	ENC 1 DATA+ / A+	Differential Data Line for Absolute Encoders (BiSS: SLO+/-) or Differential Incremental Encoder A.	I/O	12	SDAA		I/O
13	ENC 1 DATA- / A-		I/O	14	HALL A	Single-ended Commutation Sensor Inputs	I
15	ENC 1 CLK+ / B+	Differential Clock Line for Absolute Encoders (BiSS: MA+/-) or Differential Incremental Encoder B.	I/O	16	HALL B		I
17	ENC 1 CLK- / B-		I/O	18	HALL C		I
19	GROUND	Ground	GND	20	GROUND	Ground	GND
21	ENC 1 REF+ / I+	Differential Reference Mark for Absolute Encoders (Leave open for BiSS) or Differential Incremental Encoder Index.	I	22	ENC 2 A+	Differential Incremental Encoder A.	I
23	ENC 1 REF- / I-		I	24	ENC 2 A-		I
25	CAN_TX	CAN Transmit Line (requires external transceiver)	I/O	26	ENC 2 B+	Differential Incremental Encoder B.	I
27	CAN_RX	CAN Receive Line (requires external transceiver)	I/O	28	ENC 2 B-		I
29	CAN STANDBY	Low power CAN mode control	I/O	30	ENC 2 I+	Differential Incremental Encoder Index.	I
31	PDI-1	Programmable Digital Input	I	32	ENC 2 I-		I
33	PDI-2	Programmable Digital Input	I	34	PDO-1	Programmable Digital Output (TTL/8mA)	O
35	PDI-3	Programmable Digital Input	I	36	PDO-2	Programmable Digital Output (TTL/8mA)	O
37	PDI-4	Programmable Digital Input	I	38	PDO-3	Programmable Digital Output (TTL/8mA)	O
39	GROUND	Ground	GND	40	GROUND	Ground	GND
41	RESERVED	Reserved. Do not connect.	-	42	RESERVED	Reserved. Do not connect.	-
43	RESERVED	Reserved. Do not connect.	-	44	RESERVED	Reserved. Do not connect.	-
45	RESERVED	Reserved. Do not connect.	-	46	RESERVED	Reserved. Do not connect.	-
47	RESERVED	Reserved. Do not connect.	-	48	RESERVED	Reserved. Do not connect.	-
49	RESERVED	Reserved. Do not connect.	-	50	RESERVED	Reserved. Do not connect.	-
51	RESERVED	Reserved. Do not connect.	-	52	RESERVED	Reserved. Do not connect.	-
53	RESERVED	Reserved. Do not connect.	-	54	RESERVED	Reserved. Do not connect.	-
55	RESERVED	Reserved. Do not connect.	-	56	RESERVED	Reserved. Do not connect.	-
57	RESERVED	Reserved. Do not connect.	-	58	RESERVED	Reserved. Do not connect.	-
59	GROUND	Ground	GND	60	GROUND	Ground	GND
61	RESERVED	Reserved. Do not connect.	-	62	RESERVED	Reserved. Do not connect.	-
63	RESERVED	Reserved. Do not connect.	-	64	RESERVED	Reserved. Do not connect.	-
65	RESERVED	Reserved. Do not connect.	-	66	RESERVED	Reserved. Do not connect.	-
67	RESERVED	Reserved. Do not connect.	-	68	STEP	Step Input.	I
69	RESERVED	Reserved. Do not connect.	-	70	DIR	Direction Input.	I
71	RESERVED	Reserved. Do not connect.	-	72	RESERVED	Reserved. Do not connect.	-
73	+5V	+5VDC unprotected supply for local logic (See Note 1)	O	74	RESERVED	Reserved. Do not connect.	-
75	+5V_USER	+5VDC User Supply for feedback or external devices (See Note 1)	O	76	+3V3	+3.3VDC supply for local logic signals (100 mA max)	O
77	+5V_USER		O	78	+3V3		O
79	GROUND	Ground	GND	80	GROUND	Ground	GND

Connector Information	80-pin, 0.4mm spaced connector
Mating Connector Details	PANASONIC: P/N AXT380224
Mating Connector Included with Drive	No

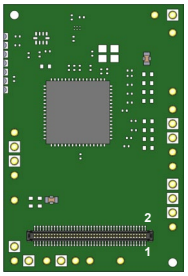

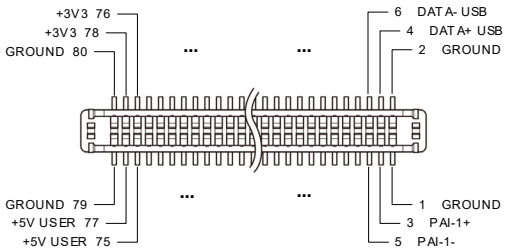

Notes

1. Total current through pins P1-73/75/77 should not exceed 300mA, while no single pin should be loaded more than 150mA.

Drive Status LED and Node Addressing

SCLA (P1-10); SDAA (P1-12)

The *SCLA and SDAA* pins allow Drive Status LED monitoring and Node Addressing to be performed with an I²C bus I/O expander. For more information on how to utilize and configure the I/O expander into an interface board, consult the hardware installation manual.

TERMINAL PIN LOCATIONS

The 15 Terminal Pins provide connection to the high power drive signals. Terminal Pins must be soldered to an interface board.

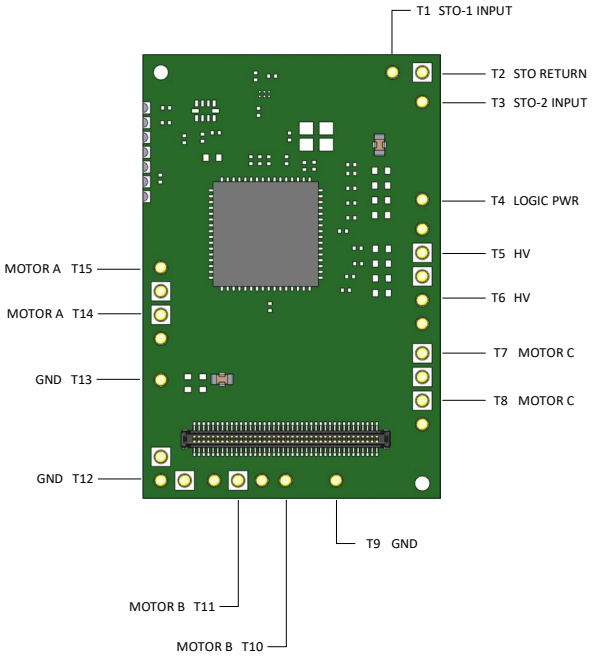

Pin	Name	Description / Notes	I/O
T1	STO-1 INPUT	Safe Torque Off – Input 1	I
T2	STO RETURN	Safe Torque Off Return	STORET
T3	STO-2 INPUT	Safe Torque Off – Input 2	I
T4	LOGIC PWR	Logic Supply Input (10 – 55VDC) (optional). When using a separate logic power supply, turn on the logic supply first before turning on the main power supply.	I
T5	HV	DC Supply Input (10 - 55 VDC). Minimum 500µF external capacitance required between HV and POWER GND.	I
T6	HV		I
T7	MOTOR C	Motor Phase C. All provided motor phase output pins must be used.	O
T8	MOTOR C		O
T9	GND	Ground.	GND
T10	MOTOR B	Motor Phase B. All provided motor phase output pins must be used.	O
T11	MOTOR B		O
T12	GND	Ground.	GND
T13	GND		GND
T14	MOTOR A	Motor Phase A. All provided motor phase output pins must be used.	O
T15	MOTOR A		O

Terminal Pin Details

Safe Torque Off (STO) Inputs

The Safe Torque Off (STO) inputs are dedicated +5VDC sinking single-ended inputs. For applications not using STO functionality, disabling of the STO feature is required for proper drive operation. STO may be disabled by following the STO Disable wiring instructions as given in the hardware installation manual. Consult the hardware installation manual for more information.

MOUNTING DIMENSIONS

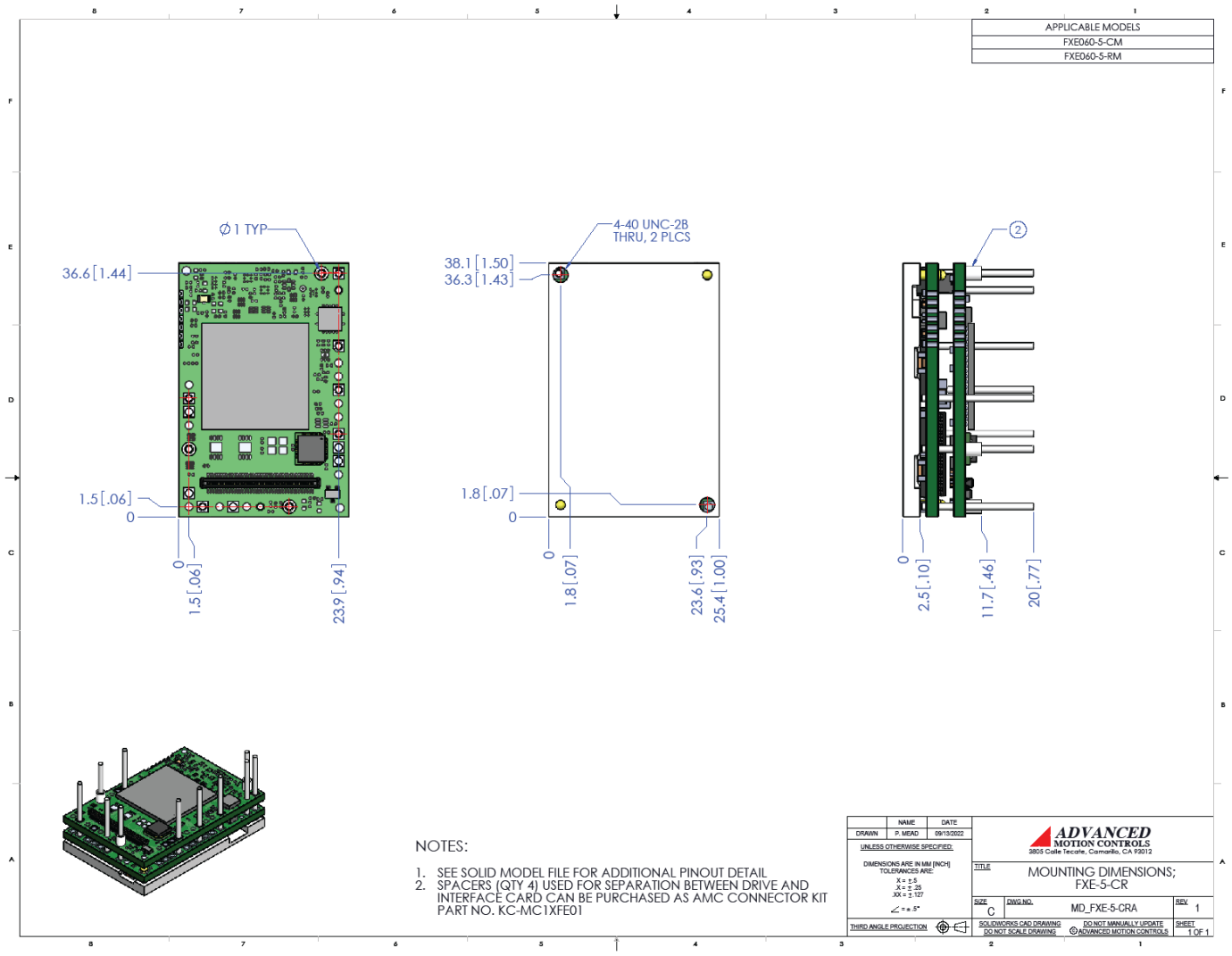

PART NUMBERING AND CUSTOMIZATION INFORMATION

F X E 060 – 10 – C M

Drive Series

F	FlexPro®

Environment

X	EXtended Environment

Form Factor

E	FlexPro® Embedded
D	FlexPro® E (W/ Development board)
M	FlexPro® Machine Mount

Maximum DC Bus Voltage

060	60 VDC
100	100 VDC

Feedback

M	Multi Encoder (BiSS, 5V Incremental)

Network Communication

E	EtherCAT
C	CANopen
R	RS485/232
IP	Ethernet/IP

Continuous Current

5	5A
10	10A
25	25A
50	50A
60C	60A (continuous only, no peak)
100	100A

ADVANCED Motion Controls also has the capability to promptly develop and deliver specified products for OEMs with volume requests. Our Applications and Engineering Departments will work closely with your design team through all stages of development in order to provide the best servo drive solution for your system. Equipped with on-site manufacturing for quick-turn customs capabilities, *ADVANCED* Motion Controls utilizes our years of engineering and manufacturing expertise to decrease your costs and time-to-market while increasing system quality and reliability.

Examples of Customized Products

- Optimized Footprint
- Private Label Software
- OEM Specified Connectors
- No Outer Case
- Increased Current Resolution
- Increased Temperature Range
- Custom Control Interface
- Integrated System I/O
- Tailored Project File
- Silkscreen Branding
- Optimized Base Plate
- Increased Current Limits
- Increased Voltage Range
- Conformal Coating
- Multi-Axis Configurations
- Reduced Profile Size and Weight

Feel free to contact us for further information and details!

Available Accessories

ADVANCED Motion Controls offers a variety of accessories designed to facilitate drive integration into a servo system. Visit www.a-m-c.com to see which accessories will assist with your application design and implementation.

All specifications in this document are subject to change without written notice. Actual product may differ from pictures provided in this document.

ADVANCED Motion Controls · 3805 Calle Tecate, Camarillo, CA, 93012
ph# 805-389-1935 · fx# 805-389-1165 · www.a-m-c.com