DC-Pancake Servomotors

U ...F... Series

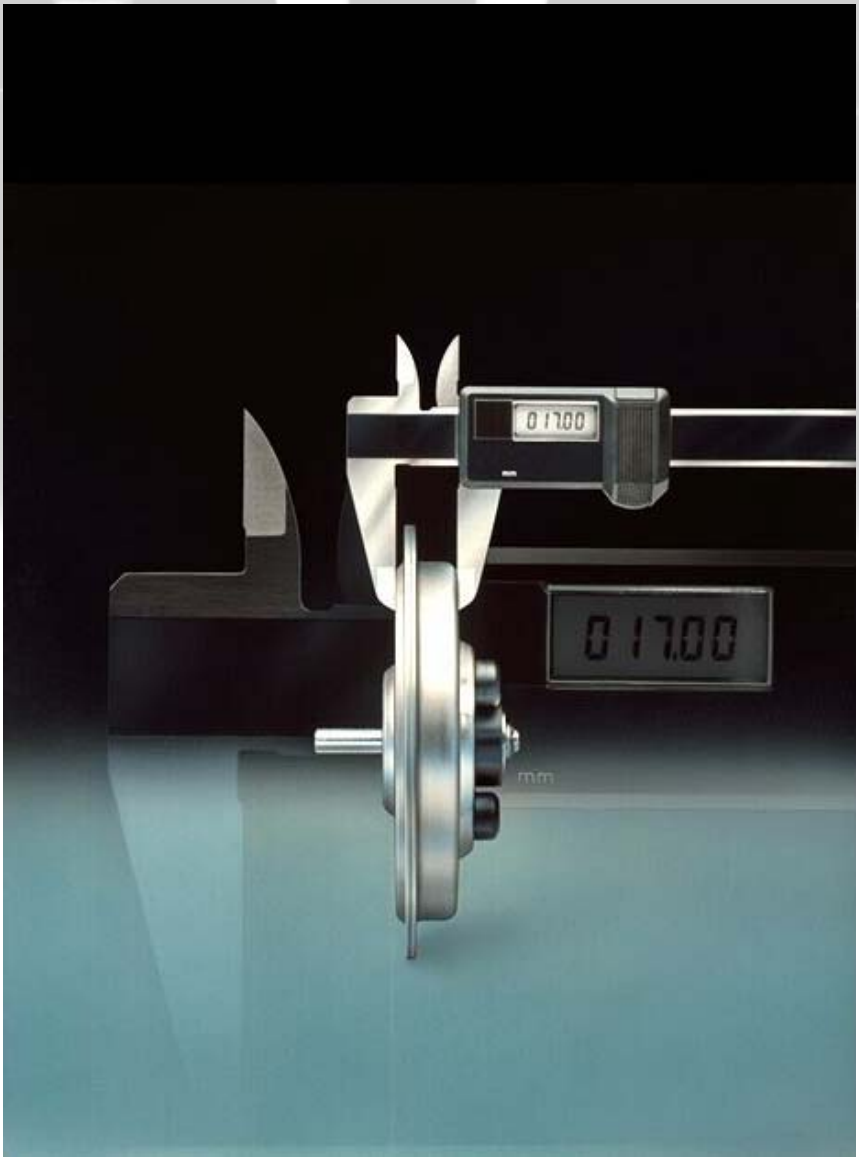

ver 0039e.0

Printed Motors GmbH *Industriestraße 20 D-74909 Meckesheim Tel. 06226 / 78700 Fax 06226 / 787029 info@printedmotors.com*

DC-Pancake Servomotor U06FNC 24V80W

Characteristics

Nennwerte [1]			
Nominal torque	M_N	20	Ncm
Nominal speed [2]	n_N	3000	min^{-1}
Nominal output [2]	P_N	85	W
Terminal voltage	U_N	21,3	V
Nominal current	I_N	6,2	A

Grenzwerte			
Peak torque [3]	M_{max}	95	Ncm
Max. peak current [3]	I_{max}	30	A
Acceleration at peak torque	a_{max}	95	10^3 rad/s^2
Stall torque [4]	M_0	20,0	Ncm
Current at stall torque [4]	I_0	6,3	A
Max. load speed	n_{max}	4000	min^{-1}
Max. no load speed	n_0	5000	min^{-1}

Spezifische Kennwerte			
Torque constant	k_T	3,3	Ncm/A
Back E.M.F constant	k_E	3,5	V/10^3 min^{-1}
Viscous damping constant	k_D	0,11	Ncm/10^3 min^{-1}
Speed regulation at const. Voltage	k_n	89	min^{-1}/Ncm
Average friction torque	M_F	1	Ncm
Terminal resistance (+25 °C)	R_A	1,2	Ω
Armature (Cu) resistance (+25 °C)	R_{Cu}	0,94	Ω
Armature Inductance (10^3 Hz)	L_A	<0,06	mH
Mechanical time constant	T_m	6,2	ms
Electrical time constant	T_e	0,11	ms
Rotor inertia	J	0,1	kg cm^2

Thermische Kennwerte			
Time const. armature-housing	T_{th1}	1,6	min
Time const. housing-ambient [5]	T_{th2}	30	min
Resistance armature-housing	R_{th1}	4	K/W
Resistance housing-ambient [5]	R_{th2}	3,5	K/W
Temp.- coeff. of back EMF	c_{th}	-0,19	%/K
Max. cont. armature temp.	th	155	°C

Physikalische Werte			
Number of magnet poles	2p	8	pcs
Number of commutator bars	z	89	pcs
Admitted shaft load, radial	F_R	10	N
Admitted shaft load, axial	F_A	5	N
Weight without extensions	m	0,6	kg

1) for DC current with form factor 1,05, uncooled execution, protection IP 54, ambient temperature +40 °C,
2) Continuous operation S1 (VDE 530), part 1,4. Motor can be run at all points of the torque speed curve S1, continuous speed beyond 4000 min^{-1} is not recommended, please check the torque speed curve.
3) Incremental motion cycle S3, VDE 530, part 1,4. Pulse duration 50 ms, 1% of duty cycle.
4) Point of intersection torque speed curve S1 with torque coordinate at speed zero. Permitted at very low speed < 1 min^{-1}. Works the motor with blocked shaft longer than 20 s, the stall current must be reduced to app. 70%.
5) Based upon mounted motors, heat transfer from motor to equipment.

Outline dimensions motor:

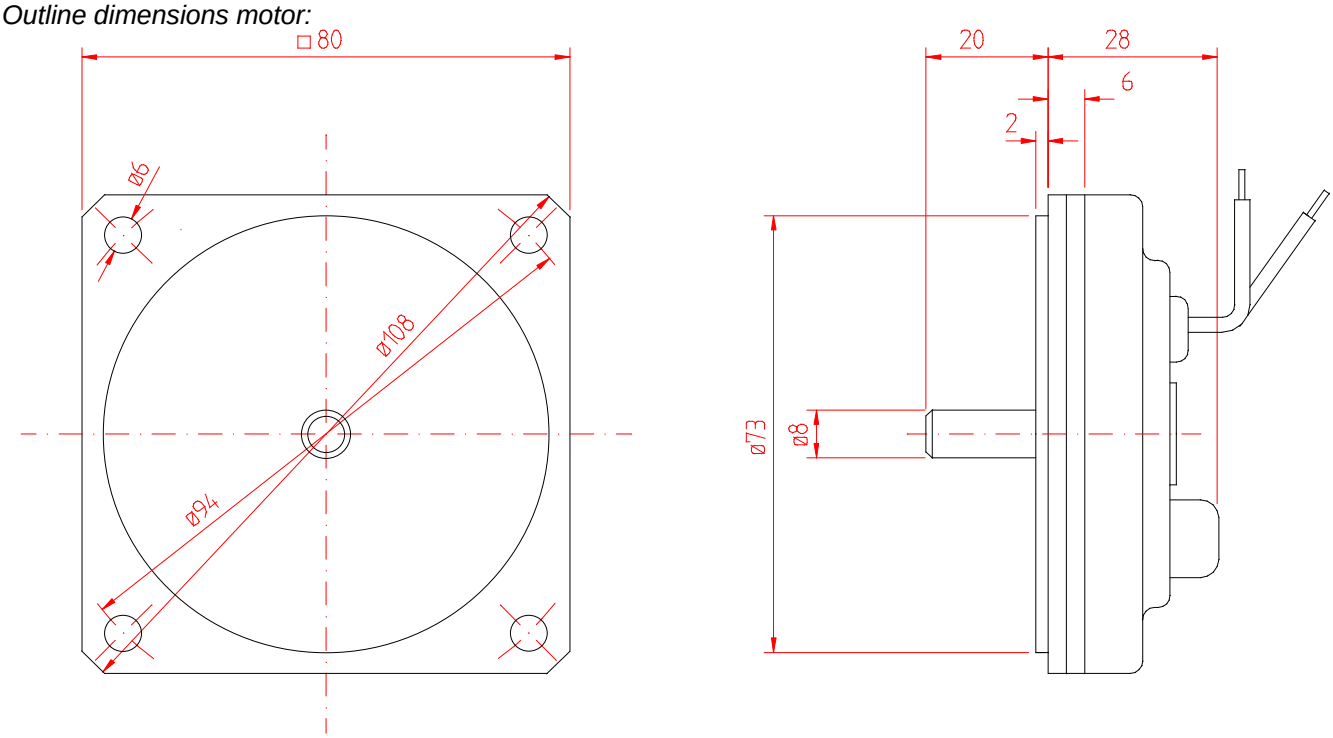

DC-Pancake Servomotor U 09 FS

Characteristics

Rated Values [1]			
Nominal torque	M_N	13,1	Ncm
Nominal speed [2]	n_N	3000	min^{-1}
Nominal output [2]	P_N	41	W
Terminal voltage	U_N	14,5	V
Nominal current	I_N	6,9	A

Motor Performance			
Peak torque [3]	M_{max}	120	Ncm
Max. peak current [3]	I_{max}	65	A
Acceleration at peak torque	a_{max}	38	10^3 rad/s^2
Stall torque [4]	M_0	16,1	Ncm
Current at stall torque [4]	I_0	8,5	A
Max. load speed	n_{max}	5000	min^{-1}
Max. no load speed	n_0	6000	min^{-1}

Intrinsic Motor Constants			
Torque constant	k_T	2,3	Ncm/A
Back E.M.F constant	k_E	2,4	V/10^3 min^{-1}
Viscous damping constant	k_D	0,39	Ncm/10^3 min^{-1}
Speed regulation at const. Voltage	k_n	122	min^{-1}/Ncm
Average friction torque	M_F	1,2	Ncm
Terminal resistance (+25 °C)	R_A	0,905	Ω
Armature (Cu) resistance (+25 °C)	R_{Cu}	0,640	Ω
Armature Inductance (10^3 Hz)	L_A	<0,06	mH
Mechanical time constant	T_m	44	ms
Electrical time constant	T_e	<0,08	ms
Rotor inertia	J	0,372	kg cm^2

Thermal Characteristics			
Time const. armature-housing	T_{th1}	1,2	min
Time const. housing-ambient [5]	T_{th2}	25	min
Resistance armature-housing	R_{th1}	2,52	K/W
Resistance housing-ambient [5]	R_{th2}	2,0	K/W
Temp.- coeff. of back EMF	c_{th}	-0,19	%/K
Max. cont. armature temp.	th	155	°C

Physical Data			
Number of magnet poles	2p	8	pcs
Number of commutator bars	z	117	pcs
Admitted shaft load, radial	F_R	25	N
Admitted shaft load, axial	F_A	25	N
Weight without extensions	m	0,54	kg

1) for DC current with form factor 1,05, uncooled execution, protection IP 54, ambient temperature +40 °C,
2) Continuous operation S1 (VDE 530), part 1,4. Motor can be run at all points of the torque speed curve S1, continuous speed beyond 4000 min^{-1} is not recommended, please check the torque speed curve.
3) Incremental motion cycle S3, VDE 530, part 1,4. Pulse duration 50 ms, 1% of duty cycle.
4) Point of intersection torque speed curve S1 with torque coordinate at speed zero. Permitted at very low speed < 1 min^{-1}. Works the motor with blocked shaft longer than 20 s, the stall current must be reduced to app. 70%.
5) Based upon mounted motors, heat transfer from motor to equipment.

Outline dimensions motor:

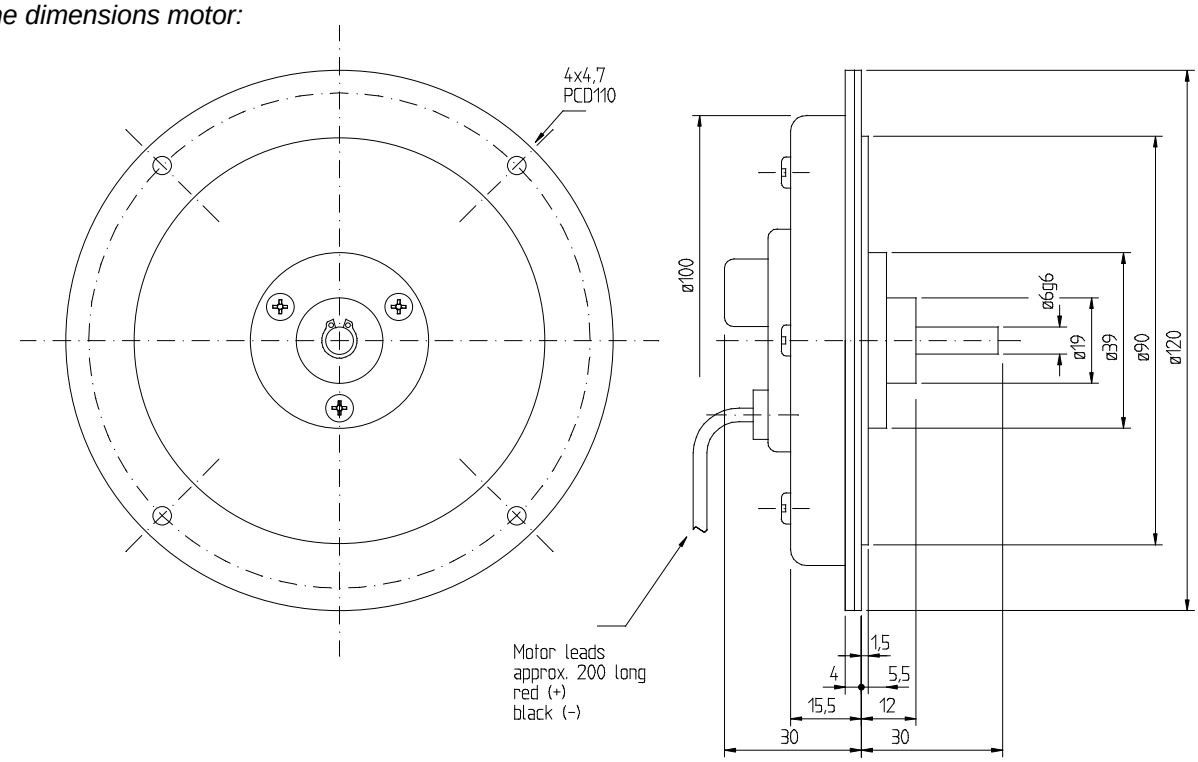

DC-Pancake Servomotor U 09 FN

Characteristics

Rated Values [1]			
Nominal torque	M_N	30	Ncm
Nominal speed [2]	n_N	3000	min^{-1}
Nominal output [2]	P_N	94	W
Terminal voltage	U_N	23	V
Nominal current	I_N	6,8	A

Motor Performance			
Peak torque [3]	M_{max}	200	Ncm
Max. peak current [3]	I_{max}	65	A
Acceleration at peak torque	a_{max}	54	10^3 rad/s^2
Stall torque [4]	M_0	19,6	Ncm
Current at stall torque [4]	I_0	4,5	A
Max. load speed	n_{max}	5000	min^{-1}
Max. no load speed	n_0	6000	min^{-1}

Intrinsic Motor Constants			
Torque constant	k_T	4,8	Ncm/A
Back E.M.F constant	k_E	5,0	V/10^3 min^{-1}
Viscous damping constant	k_D	0,3	Ncm/10^3 min^{-1}
Speed regulation at const. Voltage	k_n	122	min^{-1}/Ncm
Average friction torque	M_F	1,2	Ncm
Terminal resistance (+25 °C)	R_A	0,905	Ω
Armature (Cu) resistance (+25 °C)	R_{Cu}	0,640	Ω
Armature Inductance (10^3 Hz)	L_A	<0,06	mH
Mechanical time constant	T_m	44	ms
Electrical time constant	T_e	<0,08	ms
Rotor inertia	J	0,388	kg cm^2

Thermal Characteristics			
Time const. armature-housing	T_{th1}	1,2	min
Time const. housing-ambient [5]	T_{th2}	25	min
Resistance armature-housing	R_{th1}	2,52	K/W
Resistance housing-ambient [5]	R_{th2}	2,0	K/W
Temp.- coeff. of back EMF	c_{th}	-0,19	%/K
Max. cont. armature temp.	th	155	°C

Physical Data			
Number of magnet poles	2p	8	pcs
Number of commutator bars	z	117	pcs
Admitted shaft load, radial	F_R	25	N
Admitted shaft load, axial	F_A	25	N
Weight without extensions	m	0,54	kg

1) for DC current with form factor 1,05, uncooled execution, protection IP 54, ambient temperature +40 °C,
2) Continuous operation S1 (VDE 530), part 1,4. Motor can be run at all points of the torque speed curve S1, continuous speed beyond 4000 min^{-1} is not recommended, please check the torque speed curve.
3) Incremental motion cycle S3, VDE 530, part 1,4. Pulse duration 50 ms, 1% of duty cycle.
4) Point of intersection torque speed curve S1 with torque coordinate at speed zero. Permitted at very low speed < 1 min^{-1}. Works the motor with blocked shaft longer than 20 s, the stall current must be reduced to app. 70%.
5) Based upon mounted motors, heat transfer from motor to equipment.

Outline dimensions motor:

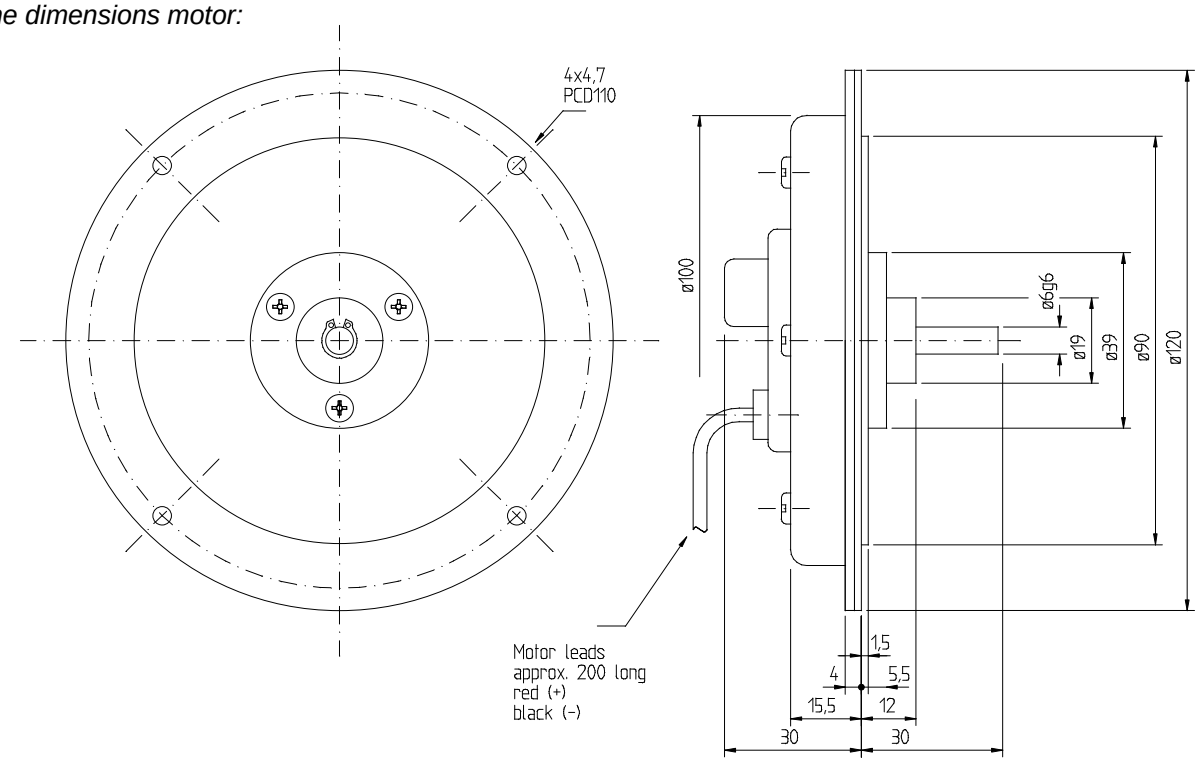

DC-Pancake Servomotor U 12 FS

Characteristics

Rated Values [1]			
Nominal torque	M_N	35	Ncm
Nominal speed [2]	n_N	3000	min^{-1}
Nominal output [2]	P_N	110	W
Terminal voltage	U_N	24	V
Nominal current	I_N	7,7	A

Motor Performance			
Peak torque [3]	M_{max}	300	Ncm
Max. peak current [3]	I_{max}	70	A
Acceleration at peak torque	a_{max}	22	10^3 rad/s^2
Stall torque [4]	M_0	22	Ncm
Current at stall torque [4]	I_0	5,0	A
Max. load speed	n_{max}	5000	min^{-1}
Max. no load speed	n_0	6000	min^{-1}

Intrinsic Motor Constants			
Torque constant	k_T	5,1	Ncm/A
Back E.M.F constant	k_E	5,3	V/10^3 min^{-1}
Viscous damping constant	k_D	0,43	Ncm/10^3 min^{-1}
Speed regulation at const. Voltage	k_n	51	min^{-1}/Ncm
Average friction torque	M_F	2,1	Ncm
Terminal resistance (+25 °C)	R_A	0,86	Ω
Armature (Cu) resistance (+25 °C)	R_{Cu}	0,61	Ω
Armature Inductance (10^3 Hz)	L_A	<0,1	mH
Mechanical time constant	T_m	44	ms
Electrical time constant	T_e	<0,16	ms
Rotor inertia	J	1,342	kg cm^2

Thermal Characteristics			
Time const. armature-housing	T_{th1}	0,8	min
Time const. housing-ambient [5]	T_{th2}	12	min
Resistance armature-housing	R_{th1}	1	K/W
Resistance housing-ambient [5]	R_{th2}	0,7	K/W
Temp.- coeff. of back EMF	c_{th}	-0,19	%/K
Max. cont. armature temp.	th	155	°C

Physical Data			
Number of magnet poles	2p	8	pcs
Number of commutator bars	z	144	pcs
Admitted shaft load, radial	F_R	30	N
Admitted shaft load, axial	F_A	20	N
Weight without extensions	m	1,2	kg

1) for DC current with form factor 1,05, uncooled execution, protection IP 54, ambient temperature +40 °C,
2) Continuous operation S1 (VDE 530), part 1,4. Motor can be run at all points of the torque speed curve S1, continuous speed beyond 4000 min^{-1} is not recommended, please check the torque speed curve.
3) Incremental motion cycle S3, VDE 530, part 1,4. Pulse duration 50 ms, 1% of duty cycle.
4) Point of intersection torque speed curve S1 with torque coordinate at speed zero. Permitted at very low speed < 1 min^{-1}. Works the motor with blocked shaft longer than 20 s, the stall current must be reduced to app. 70%.
5) Based upon mounted motors, heat transfer from motor to equipment.

Outline dimensions motor:

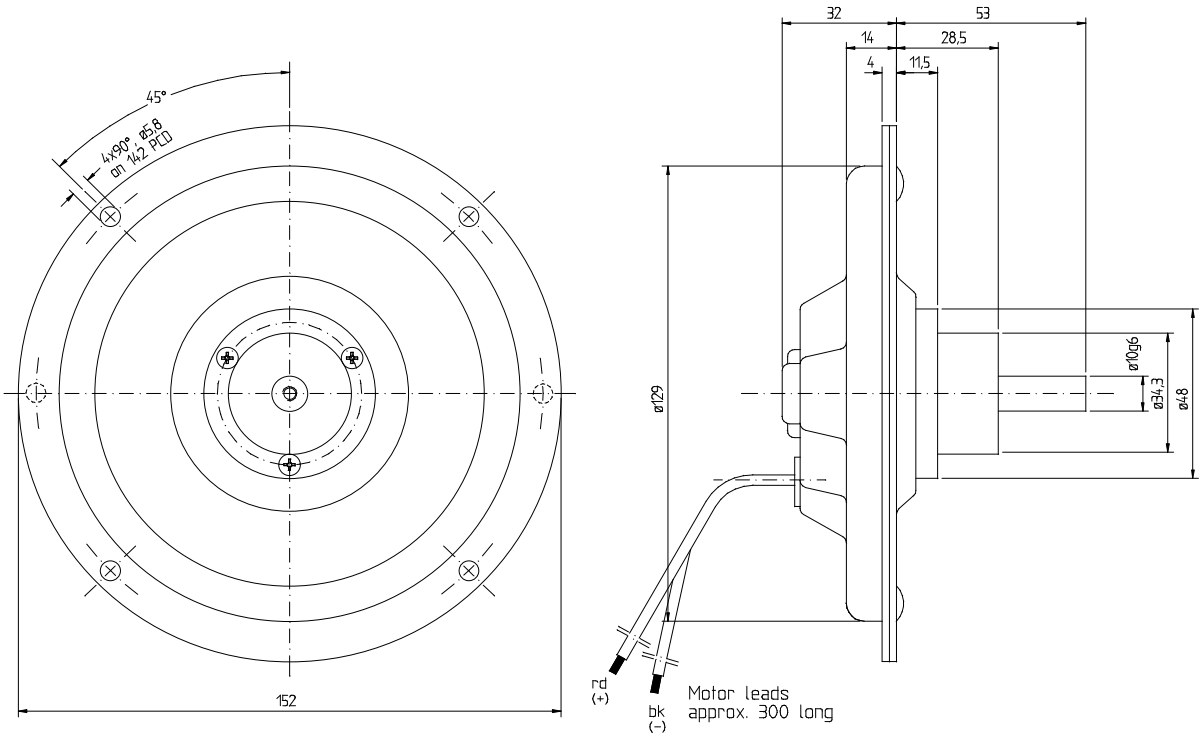

DC-Pancake Servomotor U 12 FN

Characteristics

Rated Values [1]			
Nominal torque	M_N	70	Ncm
Nominal speed [2]	n_N	3000	min^{-1}
Nominal output [2]	P_N	220	W
Terminal voltage	U_N	38	V
Nominal current	I_N	7,8	A

Motor Performance			
Peak torque [3]	M_{max}	600	Ncm
Max. peak current [3]	I_{max}	70	A
Acceleration at peak torque	a_{max}	45	10^3 rad/s^2
Stall torque [4]	M_0	75	Ncm
Current at stall torque [4]	I_0	8,1	A
Max. load speed	n_{max}	5000	min^{-1}
Max. no load speed	n_0	6000	min^{-1}

Intrinsic Motor Constants			
Torque constant	k_T	11,4	Ncm/A
Back E.M.F constant	k_E	11,9	V/10^3 min^{-1}
Viscous damping constant	k_D	0,56	Ncm/10^3 min^{-1}
Speed regulation at const. Voltage	k_n	42	min^{-1}/Ncm
Average friction torque	M_F	2,1	Ncm
Terminal resistance (+25 °C)	R_A	0,86	Ω
Armature (Cu) resistance (+25 °C)	R_{Cu}	0,61	Ω
Armature Inductance (10^3 Hz)	L_A	<0,1	mH
Mechanical time constant	T_m	44	ms
Electrical time constant	T_e	<0,16	ms
Rotor inertia	J	1,342	kg cm^2

Thermal Characteristics			
Time const. armature-housing	T_{th1}	0,8	min
Time const. housing-ambient [5]	T_{th2}	12	min
Resistance armature-housing	R_{th1}	1	K/W
Resistance housing-ambient [5]	R_{th2}	0,7	K/W
Temp.- coeff. of back EMF	c_{th}	-0,19	%/K
Max. cont. armature temp.	th	155	°C

Physical Data			
Number of magnet poles	2p	8	pcs
Number of commutator bars	z	144	pcs
Admitted shaft load, radial	F_R	30	N
Admitted shaft load, axial	F_A	20	N
Weight without extensions	m	1,0	kg

1) for DC current with form factor 1,05, uncooled execution, protection IP 54, ambient temperature +40 °C,
2) Continuous operation S1 (VDE 530), part 1,4. Motor can be run at all points of the torque speed curve S1, continuous speed beyond 4000 min^{-1} is not recommended, please check the torque speed curve.
3) Incremental motion cycle S3, VDE 530, part 1,4. Pulse duration 50 ms, 1% of duty cycle.
4) Point of intersection torque speed curve S1 with torque coordinate at speed zero. Permitted at very low speed < 1 min^{-1}. Works the motor with blocked shaft longer than 20 s, the stall current must be reduced to app. 70%.
5) Based upon mounted motors, heat transfer from motor to equipment.

Outline dimensions motor:

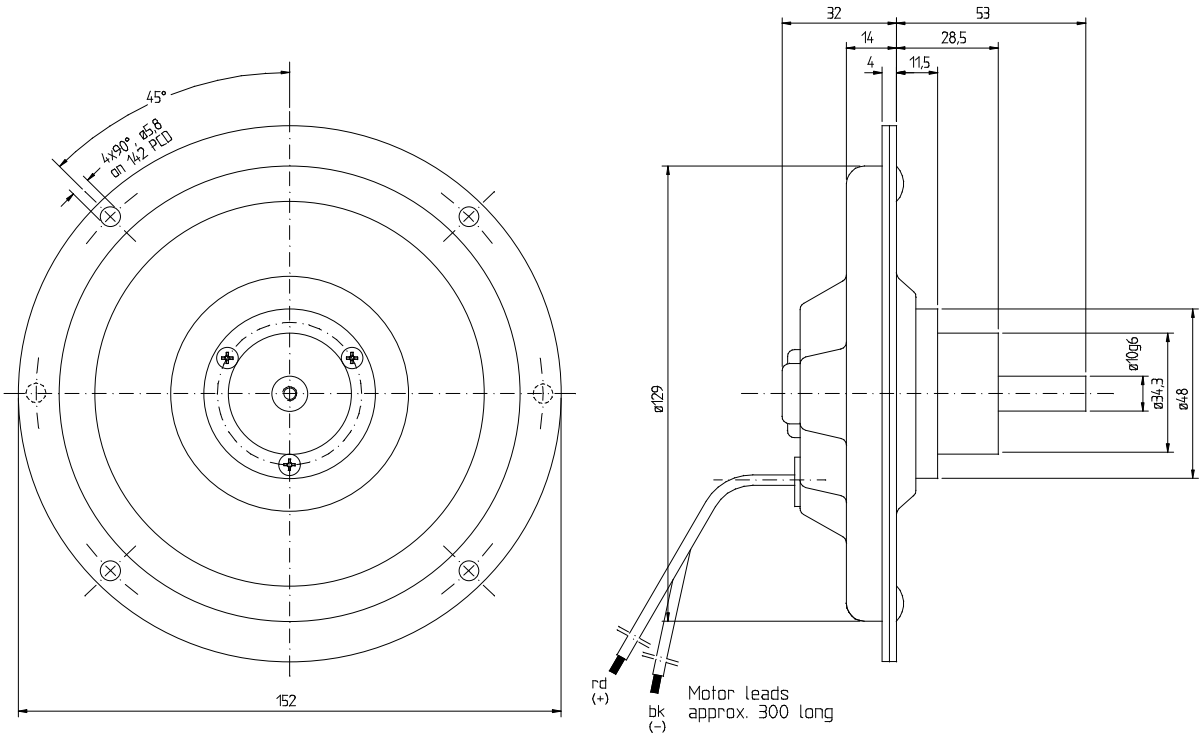

DC-Pancake Servomotor U 16 FS

Characteristics

Rated Values [1]			
Nominal torque	M_N	96	Ncm
Nominal speed [2]	n_N	3000	min^{-1}
Nominal output [2]	P_N	300	W
Terminal voltage	U_N	43,3	V
Nominal current	I_N	9,3	A

Motor Performance			
Peak torque [3]	M_{max}	760	Ncm
Max. peak current [3]	I_{max}	65	A
Acceleration at peak torque	a_{max}	3,2	10^3 rad/s^2
Stall torque [4]	M_0	84	Ncm
Current at stall torque [4]	I_0	7,5	A
Max. load speed	n_{max}	5000	min^{-1}
Max. no load speed	n_0	6000	min^{-1}

Intrinsic Motor Constants			
Torque constant	k_T	11,2	Ncm/A
Back E.M.F constant	k_E	11,8	V/10^3 min^{-1}
Viscous damping constant	k_D	0,99	Ncm/10^3 min^{-1}
Speed regulation at const. Voltage	k_n	18	min^{-1}/Ncm
Average friction torque	M_F	4,9	Ncm
Terminal resistance (+25 °C)	R_A	0,85	Ω
Armature (Cu) resistance (+25 °C)	R_{Cu}	0,7	Ω
Armature Inductance (10^3 Hz)	L_A	<0,1	mH
Mechanical time constant	T_m	7,2	ms
Electrical time constant	T_e	<0,16	ms
Rotor inertia	J	6,28	kg cm^2

Thermal Characteristics			
Time const. armature-housing	T_{th1}	1,4	min
Time const. housing-ambient [5]	T_{th2}	12	min
Resistance armature-housing	R_{th1}	1	K/W
Resistance housing-ambient [5]	R_{th2}	0,7	K/W
Temp.- coeff. of back EMF	c_{th}	-0,19	%/K
Max. cont. armature temp.	th	155	°C

Physical Data			
Number of magnet poles	2p	8	pcs
Number of commutator bars	z	162	pcs
Admitted shaft load, radial	F_R	60	N
Admitted shaft load, axial	F_A	40	N
Weight without extensions	m	2,3	kg

1) for DC current with form factor 1,05, uncooled execution, protection IP 54, ambient temperature +40 °C,
2) Continuous operation S1 (VDE 530), part 1,4. Motor can be run at all points of the torque speed curve S1, continuous speed beyond 4000 min^{-1} is not recommended, please check the torque speed curve.
3) Incremental motion cycle S3, VDE 530, part 1,4. Pulse duration 50 ms, 1% of duty cycle.
4) Point of intersection torque speed curve S1 with torque coordinate at speed zero. Permitted at very low speed < 1 min^{-1}. Works the motor with blocked shaft longer than 20 s, the stall current must be reduced to app. 70%.
5) Based upon mounted motors, heat transfer from motor to equipment.

Outline dimensions motor:

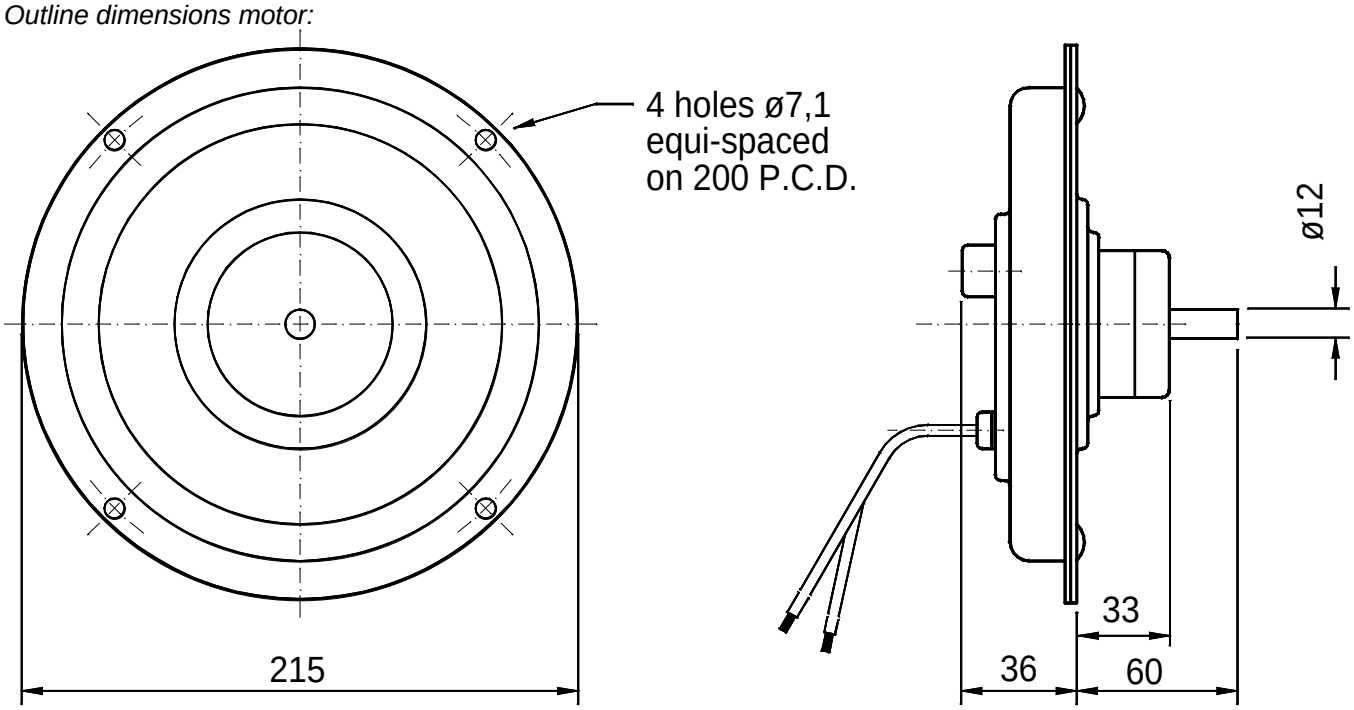

DC-Pancake Servomotor U 16 FN

Characteristics

Rated Values [1]			
Nominal torque	M_N	170	Ncm
Nominal speed [2]	n_N	3000	min^{-1}
Nominal output [2]	P_N	534	W
Terminal voltage	U_N	76	V
Nominal current	I_N	8,4	A

Motor Performance			
Peak torque [3]	M_{max}	1360	Ncm
Max. peak current [3]	I_{max}	65	A
Acceleration at peak torque	a_{max}	5,7	10^3 rad/s^2
Stall torque [4]	M_0	136	Ncm
Current at stall torque [4]	I_0	7,5	A
Max. load speed	n_{max}	5000	min^{-1}
Max. no load speed	n_0	6000	min^{-1}

Intrinsic Motor Constants			
Torque constant	k_T	21,9	Ncm/A
Back E.M.F constant	k_E	22,9	V/10^3 min^{-1}
Viscous damping constant	k_D	2,5	Ncm/10^3 min^{-1}
Speed regulation at const. Voltage	k_n	12	min^{-1}/Ncm
Average friction torque	M_F	4,9	Ncm
Terminal resistance (+25 °C)	R_A	0,85	Ω
Armature (Cu) resistance (+25 °C)	R_{Cu}	0,7	Ω
Armature Inductance (10^3 Hz)	L_A	<0,1	mH
Mechanical time constant	T_m	7,2	ms
Electrical time constant	T_e	<0,16	ms
Rotor inertia	J	6,28	kg cm^2

Thermal Characteristics			
Time const. armature-housing	T_{th1}	1,4	min
Time const. housing-ambient [5]	T_{th2}	12	min
Resistance armature-housing	R_{th1}	1	K/W
Resistance housing-ambient [5]	R_{th2}	0,7	K/W
Temp.- coeff. of back EMF	c_{th}	-0,19	%/K
Max. cont. armature temp.	th	155	°C

Physical Data			
Number of magnet poles	2p	8	pcs
Number of commutator bars	z	162	pcs
Admitted shaft load, radial	F_R	60	N
Admitted shaft load, axial	F_A	40	N
Weight without extensions	m	2,3	kg

1) for DC current with form factor 1,05, uncooled execution, protection IP 54, ambient temperature +40 °C,
2) Continuous operation S1 (VDE 530), part 1,4. Motor can be run at all points of the torque speed curve S1, continuous speed beyond 4000 min^{-1} is not recommended, please check the torque speed curve.
3) Incremental motion cycle S3, VDE 530, part 1,4. Pulse duration 50 ms, 1% of duty cycle.
4) Point of intersection torque speed curve S1 with torque coordinate at speed zero. Permitted at very low speed < 1 min^{-1}. Works the motor with blocked shaft longer than 20 s, the stall current must be reduced to app. 70%.
5) Based upon mounted motors, heat transfer from motor to equipment.
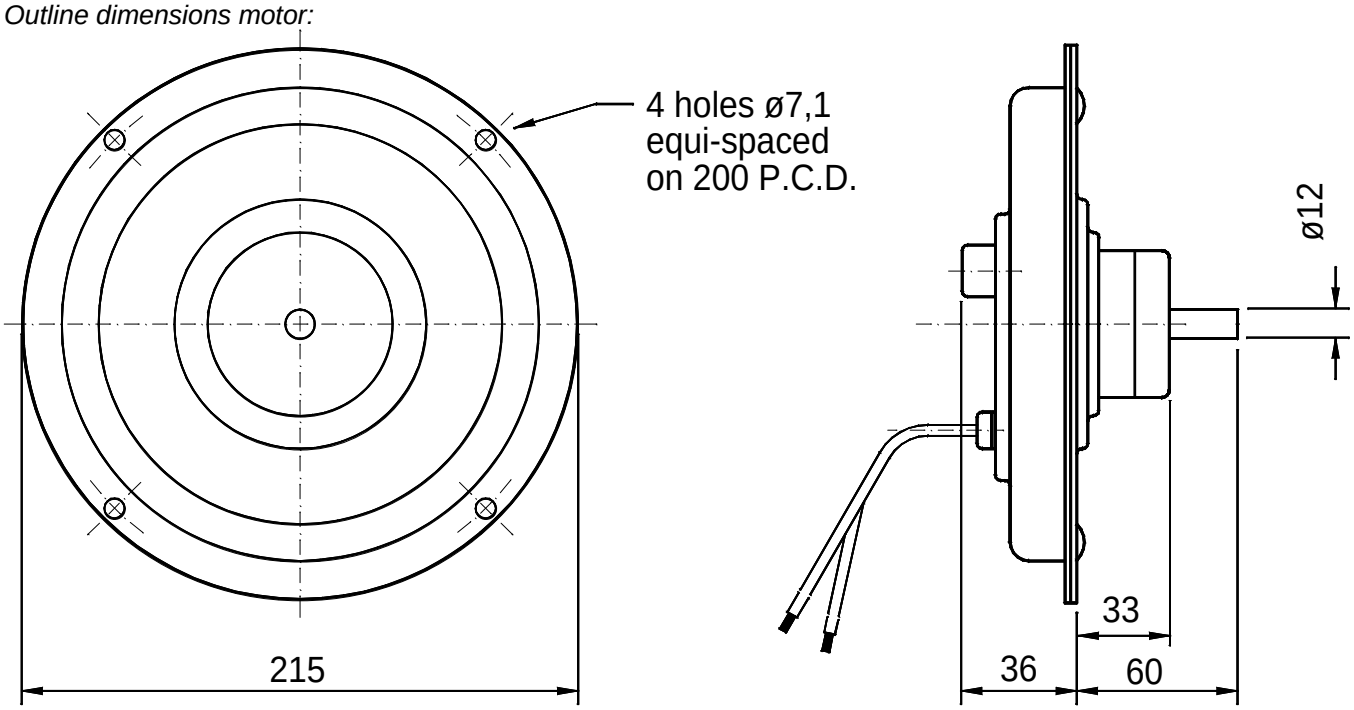
Outline dimensions motor: